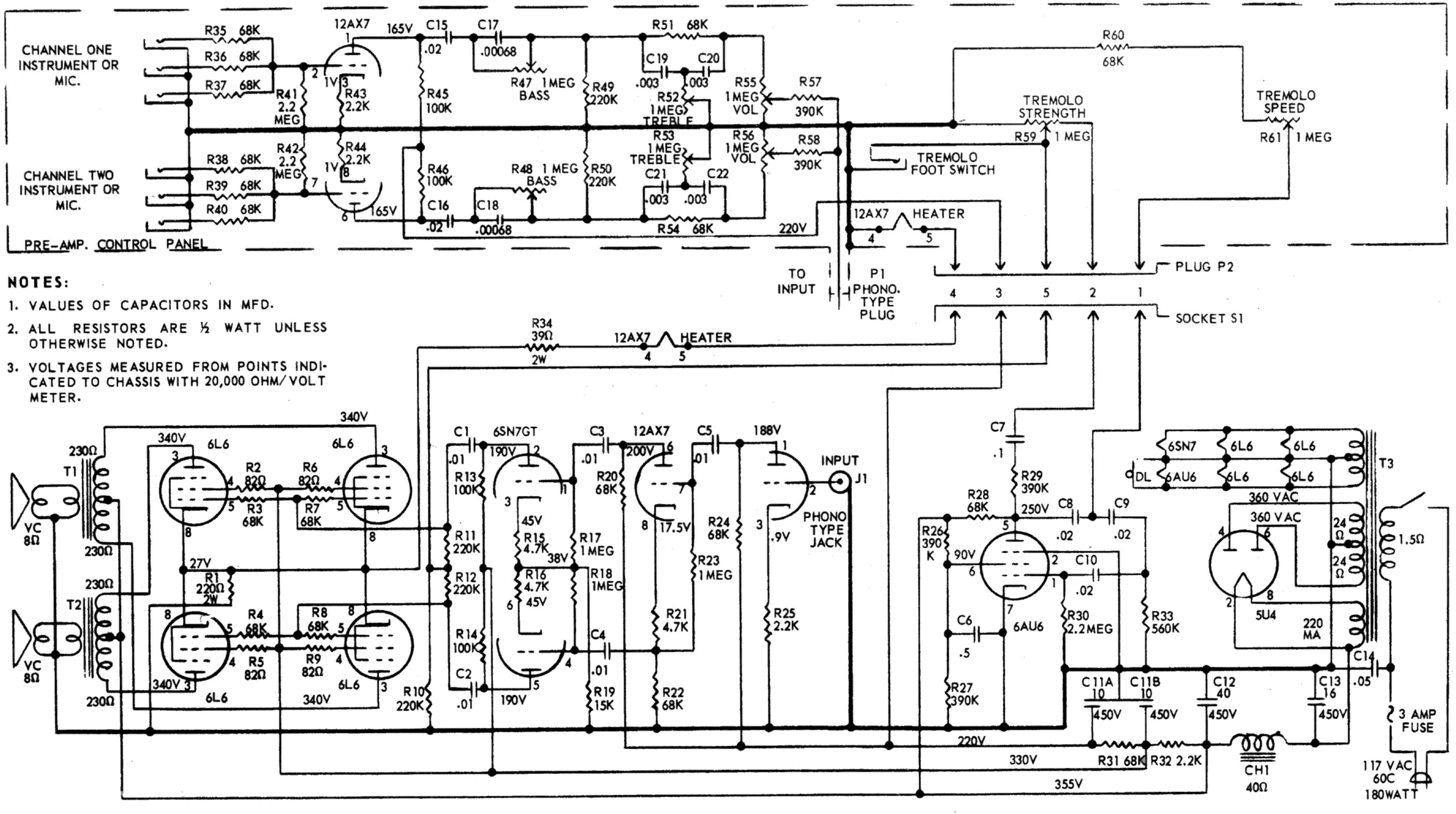

SILVERTONE MUSICAL INSTRUMENT AMPLIFIER MODEL 1396, Ch, 185.10500

SCHEMATIC DIAGRAM COURTESY SEARS, ROEBUCK & CO.