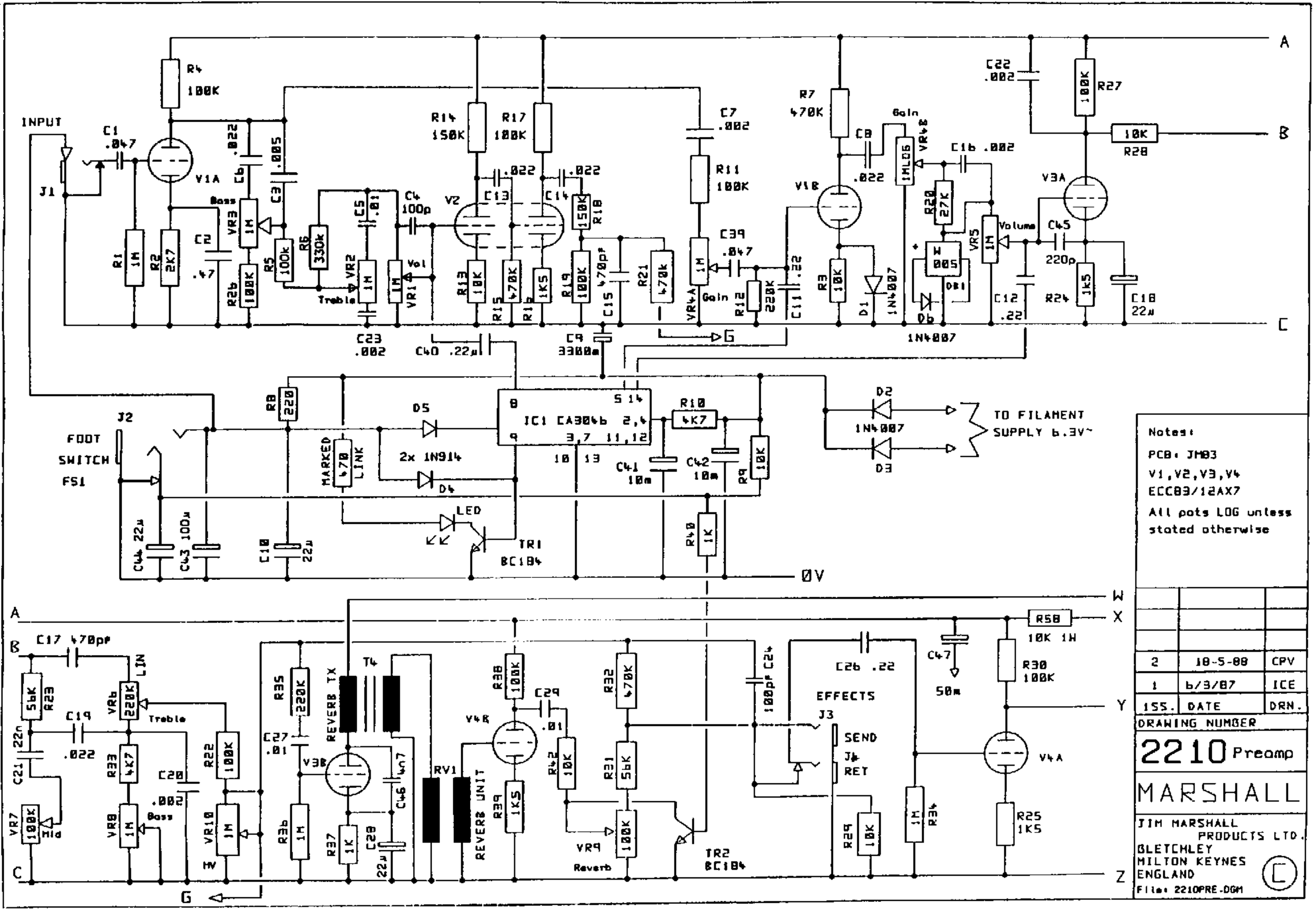
INPUT
J1
C1 .047
R4 100K
V1A
R1 1M
R2 2K7
C2 .47
R26 100K
Bass
VR3 1M
C6 .022
C3 .005
R5 100k
R6 330k
C5 .01
VR2 1M
Treble
C4 100p
VR1 1M
Vol
V2
R14 150K
R17 100K
C13 .022
C14 .022
R13 10K
R15 470K
R16 1K5
R18 150K
R19 100K
C15 470pF
R21 470k
C7 .002
R11 100K
C39 .047
VR4A 1M
Gain
R12 220K
C11 .22
R7 470K
C8 .022
V1B
R3 10K
D1 1N4007
Gain
VR4B 1MLOG
C16 .002
R20 27K
W 005
D1
Db
1N4007
VR5 1M
Volume
C12 .22
C22 .002
R27 100K
R28 10K
V3A
C45 220p
R24 1K5
C18 22µ
C23 .002
C40 .22µ
C9 3300µ
G
R8 220
J2
FOOT SWITCH FS1
MARKED 470 LINK
D5
2x 1N914
D4
IC1 CA3046
R10 4K7
C41 10m
C42 10m
R9 10K
D2 1N4007
D3
TO FILAMENT SUPPLY 6.3V~
LED
TR1 BC184
R40 1K
C44 22µ
C43 100µ
C10 22µ
0V
Notes:
PCB: JM83
V1,V2,V3,V4
ECC83/12AX7
All pots LOG unless stated otherwise
C17 470pF
LIN
R23 56K
VR6 220K
Treble
C19 .022
C21 22n
R33 4K7
C20 .002
R22 100K
VR7 100K
Mid
VR8 1M
Bass
VR10 1M
HV
R35 220K
C27 .01
REVERB TX
T4
V3B
R36 1M
R37 1K
C46 4n7
C28 22µ
RV1
REVERB UNIT
V4B
R38 100K
C29 .01
R39 1K5
R42 10K
VR9 Reverb
R32 470K
R31 56K
R41 100K
TR2 BC184
100pF C24
C26 .22
EFFECTS
J3
SEND
J4
RET
R29 10K
C47 50m
R58 10K 1W
R30 100K
V4A
R34 1M
R25 1K5
2 | 18-5-88 | CPV
1 | 6/3/87 | ICE
ISS. | DATE | DRN.
DRAWING NUMBER
2210 Preamp
MARSHALL
JIM MARSHALL PRODUCTS LTD.
BLETCHLEY
MILTON KEYNES
ENGLAND
File: 2210PRE.DGM

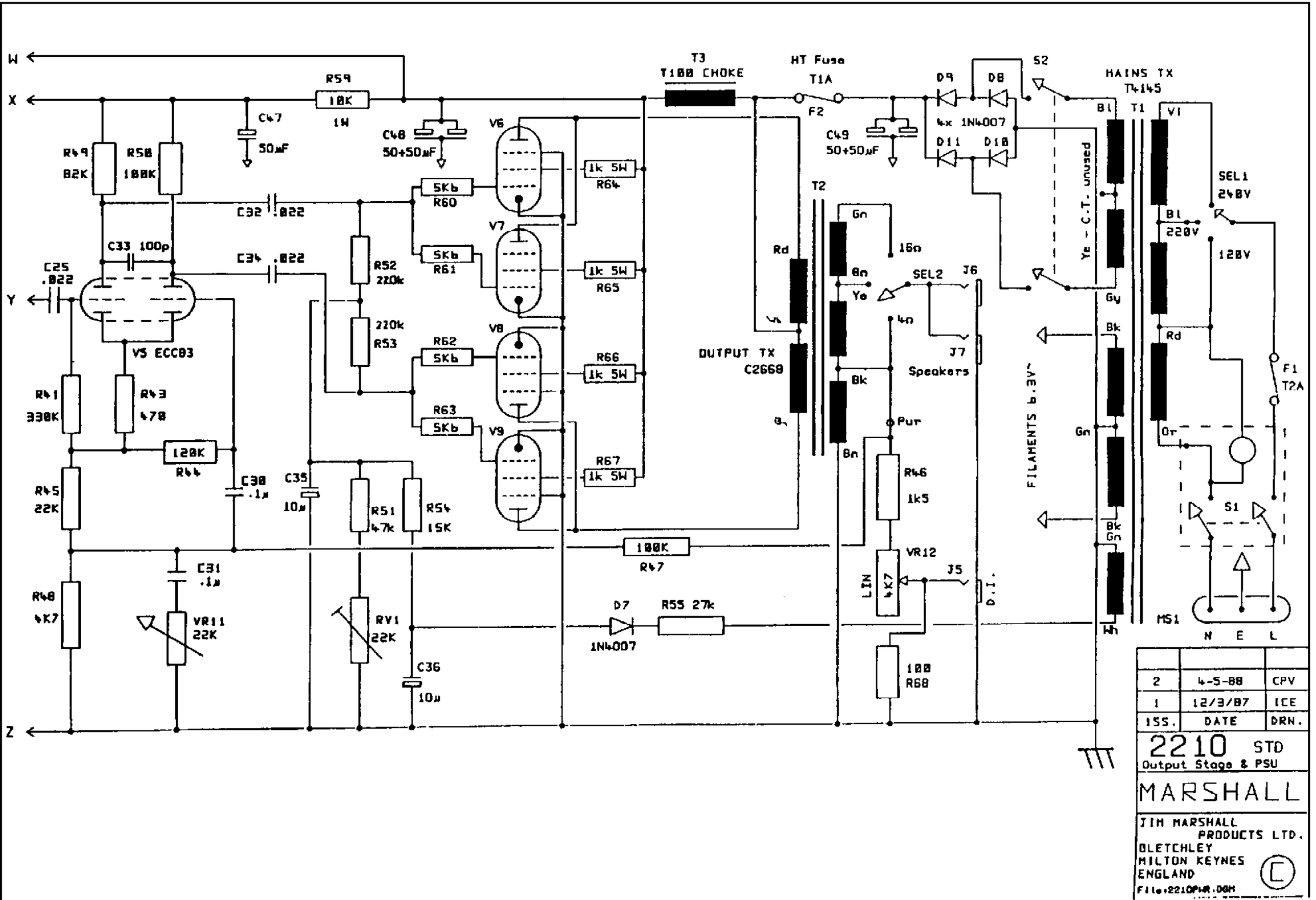

2	4-5-88	CPV
1	12/3/87	ICE
ISS.	DATE	DRN.

2210 STD
Output Stage & PSU

MARSHALL

JIM MARSHALL
PRODUCTS LTD.
BLETCHLEY
MILTON KEYNES
ENGLAND

File:2210PWR.DGM